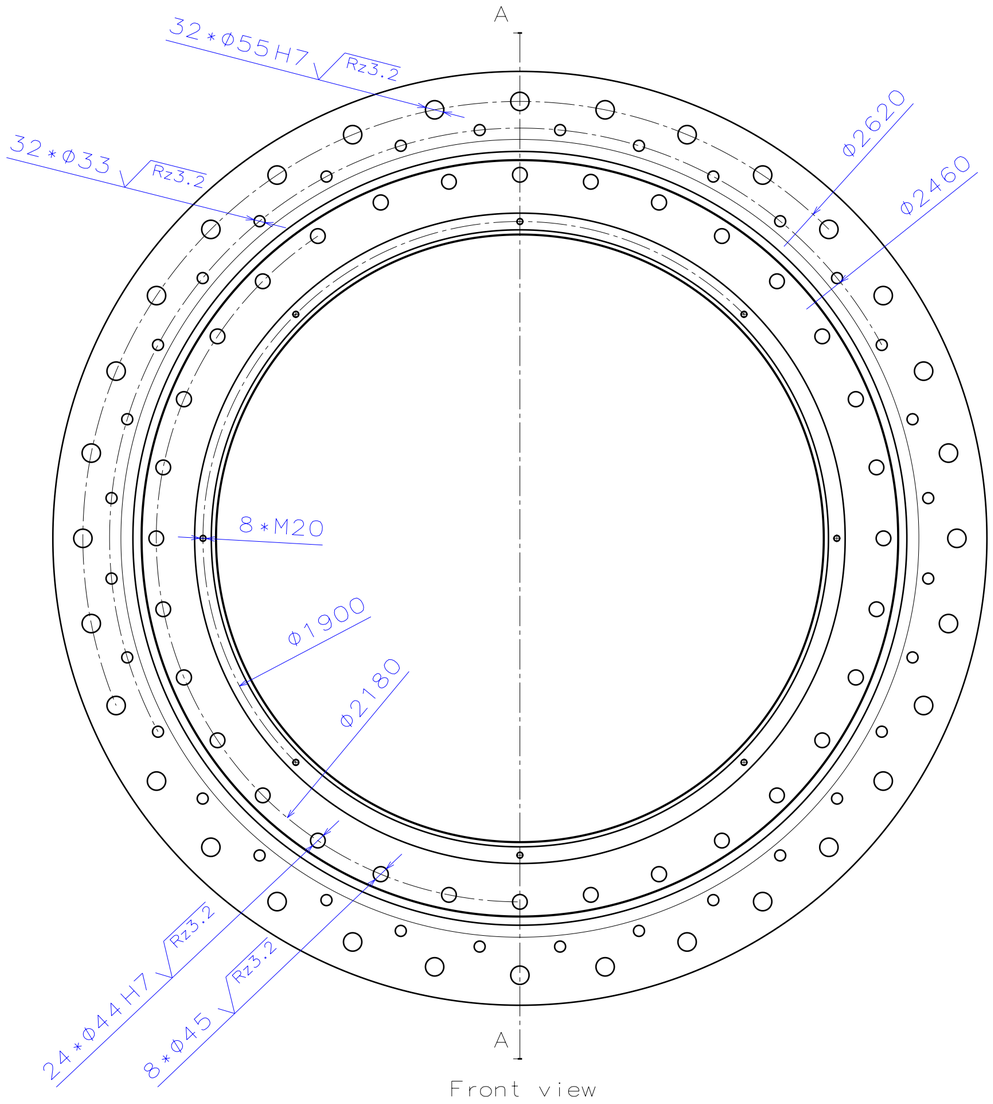

Front view

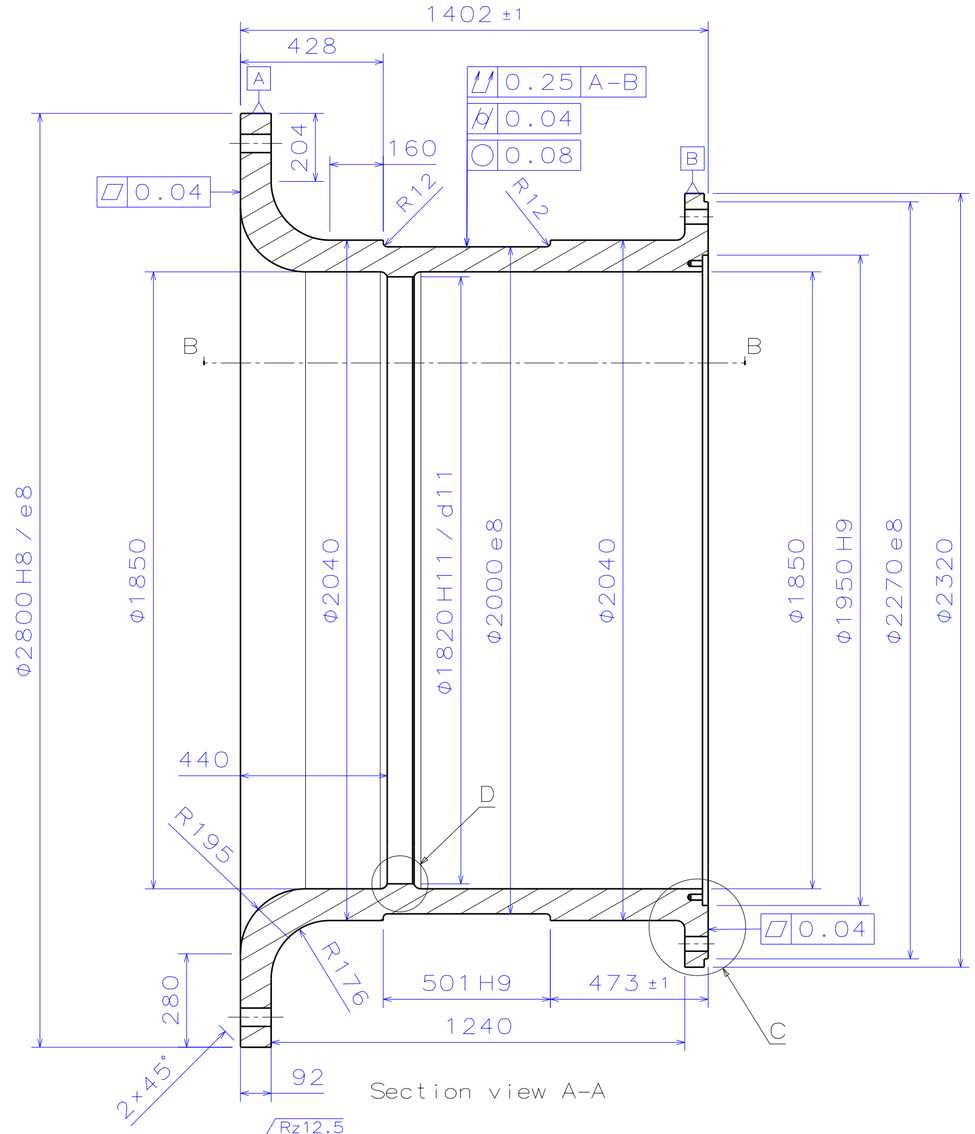

Section view A-A

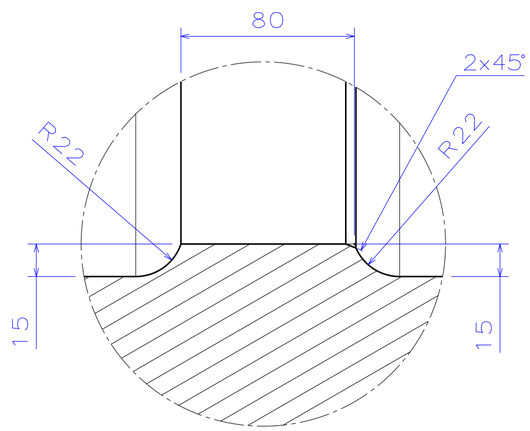

Detail D

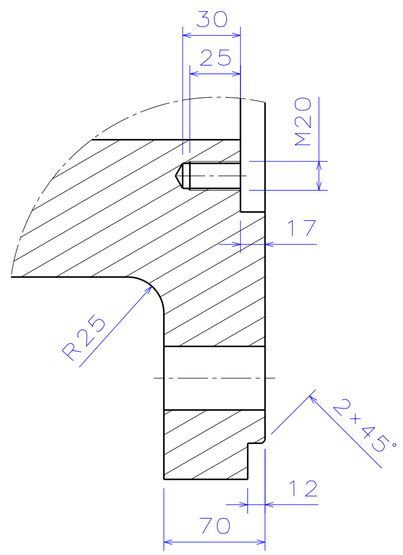

Detail C

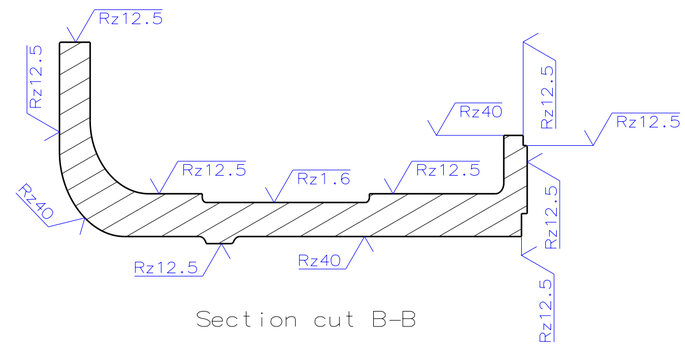

Section cut B-B

شرکت سیمان قشم سهامی خاص		DRAWING TITLE: Outlet Trunnion		
DRAWN BY: E.Tanasian	DATE: 1401/12/13	DRAWING NUMBER: M1097.3-14		
CHECKED BY: E.Tanasian	DATE: 1401/12/13	WEIGHT: 8728 kg	Ref. DRAWING: M1097.3(Item24)	REV: 0
APPROVED BY: H.Ramedani	DATE: 1401/12/13	QTY: 1	MATERIAL: ZG230-450	SHEET 1/1