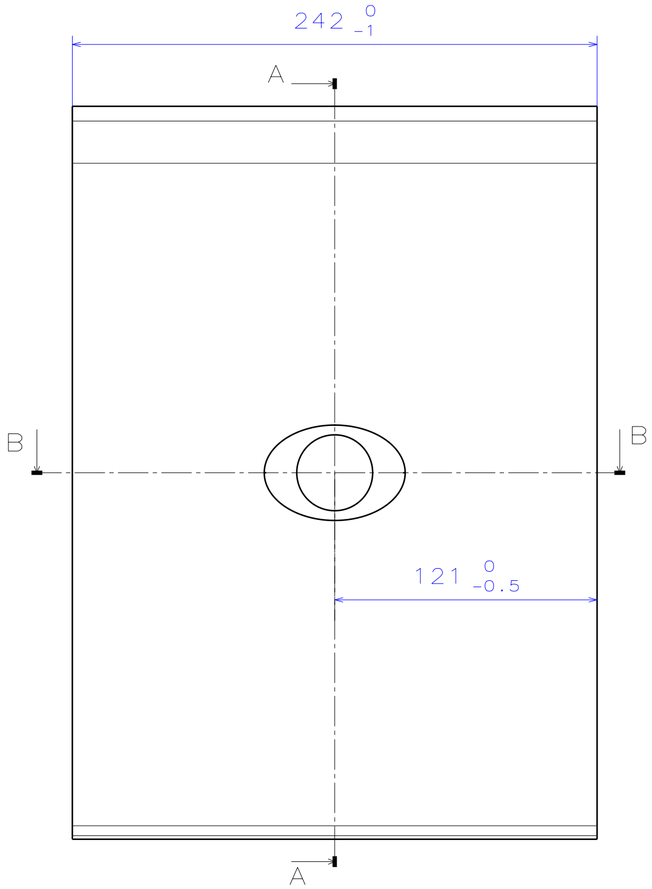

Front view

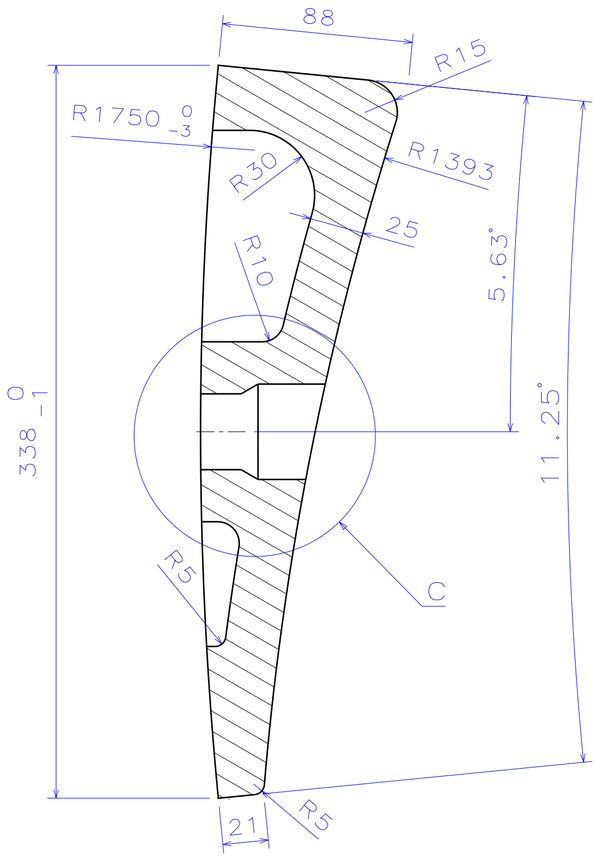

Section view A-A

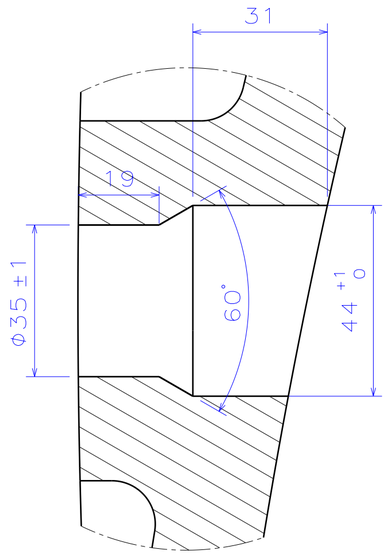

Detail C

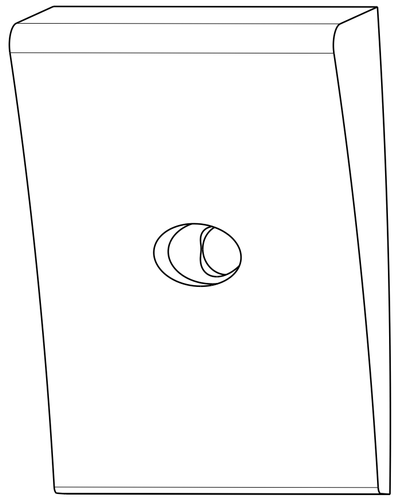

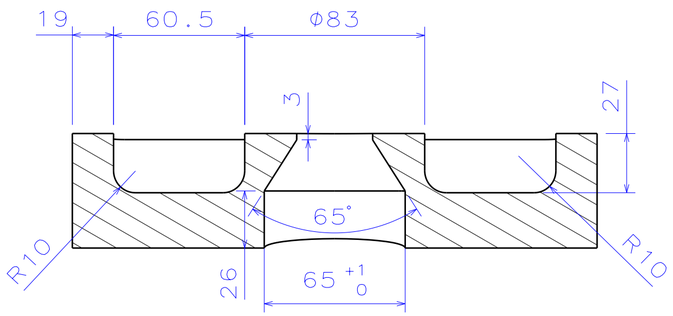

Section view B-B

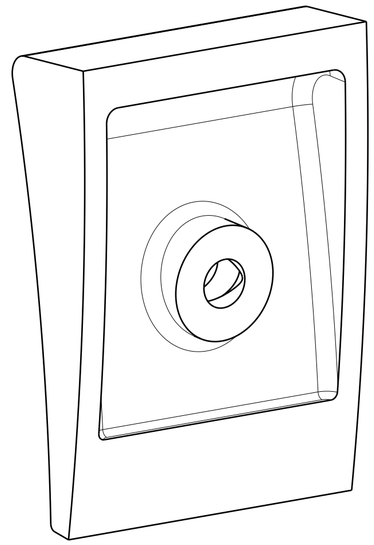

Isometric view

General Tolerance : ISO 2078-m

شرکت سیمان قشم سهامی خاص		DRAWING TITLE: Step Liner (3500-242)		
DRAWN BY: E.Tanasian	DATE: 1399/07/05	DRAWING NUMBER: M1097.3-5		
CHECKED BY: H.Ramedani	DATE: 1399/07/05	WEIGHT: 27.5 kg	Ref. DRAWING: M1097.3 (Item 13)	REV: 02
APPROVED BY: A.Nilforoushan	DATE: 1399/07/05	QTY: 538	MATERIAL: 1.2379(50HRC)	SHEET 1/1